INSTALLATION OPERATION & MAINTENANCE MANUAL

for folding door systems

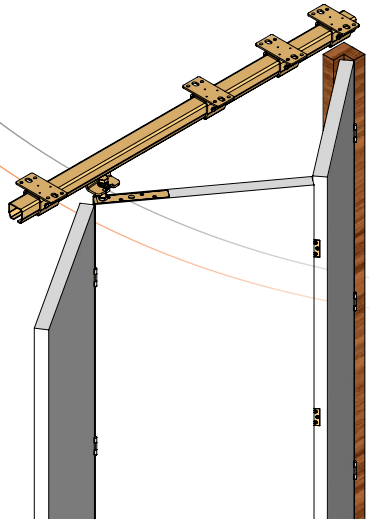

index

INSTALLATION, OPERATION & MAINTENANCE MANUAL
for folding door systems

1. TECHNICAL DESCRIPTION OF NIKO FOLDING DOOR SYSTEMS

1.1 General description
1.2 Component specifications for a typical folding door system
1.2.1 General details for track profiles
1.2.2 General detail for guide track profiles
1.3 Technical specifications
1.3.1 Chart with allowed loads for wheel hangers
1.3.2 Supporting options

2. INSTALLATION INSTRUCTIONS FOR A TYPICAL FOLDING DOOR

2.1 Installation of track, brackets & guide track
2.2 Installation of door panels
2.2.1 Calculation of panels width
2.2.2 Preparation of panels
2.2.3 Installation of panels

3. MULTIPLE PANEL FOLDING DOOR
4. FOLDING DOOR - HARMONICA TYPE
5. BASIC RULES FOR SAFETY - OPERATION
6. INSPECTION AND MAINTENANCE SCHEDULE

Version June 2017

Prologue:

Thank you for selecting our products.
To ensure correct installation, please read this manual thoroughly.
In the first chapter, a general description of system components is presented with the technical specifications. Installation instructions for a typical folding door with three panels come next as well as calculations in order to determine the track length and the panels width. An example of multiple panel folding door is also described, including the steps for installing the splice joint .B49. Chapter 4 presents an example of a folding door, harmonica type.

On the instructions:
The information on this form have been checked carefully for their accuracy. However, there is not given guarantee for the correctness of the contents. The information on this form may change without notice.

Copyright:

This document contains information protected by the laws of copyright and includes patents. All the rights of this document belong to the maker company. No part of this document can be published with any mechanical, electronic or any other way, without the previous consent of NIKO.

Brands:

All brands (and their logos) are property of their owners.
NIKO is a brand name of Helm Hellas SA and will be used from herein to describe the company.

Official manufacturer:

HELM HELLAS S.A.
82 Km Athens – Korinthos
P.O. Box 209 GR 20100 Korinthos, Greece
Tel: 0030 (0) 2741076800
Fax: 0030 (0) 2741025368
e-mail: info@niko.eu.com
www.niko.eu.com

1 TECHNICAL DESCRIPTION
of NIKO folding door systems

1.1 General description

NIKO®" provides a wide range of zinc plated products for sliding and folding door applications in order to meet the high demands of door hardware market for domestic, commercial and industrial applications. Our products are also available in stainless steel series 304/316.

Key design characteristics of Niko folding door fittings:

1. We have achieved the highest EN 1527 certification ranking
2. Five different track profiles.
3. All our products are zinc plated, which allows smoother running of our wheels in the track profiles and uniform color among our components.
4. Our track profiles have an unrivaled compact construction and therefore require less space.
5. Simple installation and adjustment.
6. Our wheels and bearings are custom made and are significantly more durable under load than standard bearings.
7. The NIKO enclosed track tapered design enables self-alignment of the wheel hangers and reduces the possibility of dust build up.
8. Greater aesthetic appeal as the guide track is recessed (concealed) to the floor.
9. Quiet and effortless operation.
10. Flat folding for easier access and space saving.
11. Technical data:
    Min/Max door panel width: 600mm - 900mm
    Max door panel weight: 300kg
    Max door panels: 9 - NIKO recommends 7 panels for optimal operation

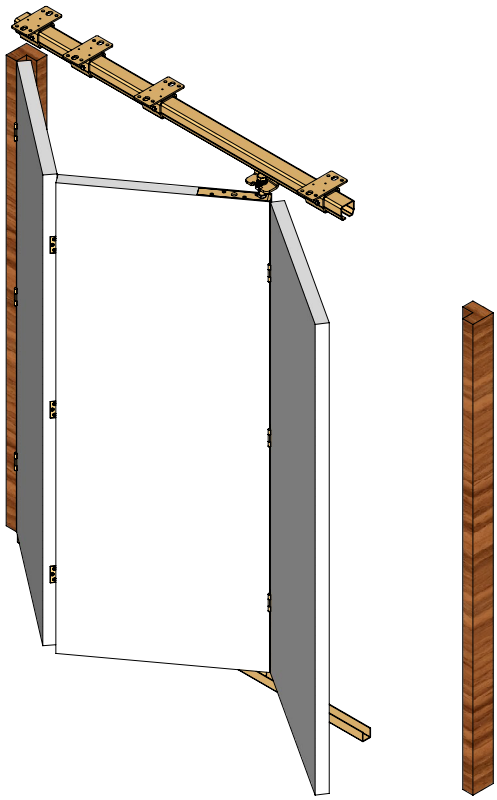

1.2 Component specifications

for a typical folding door system with wooden panels

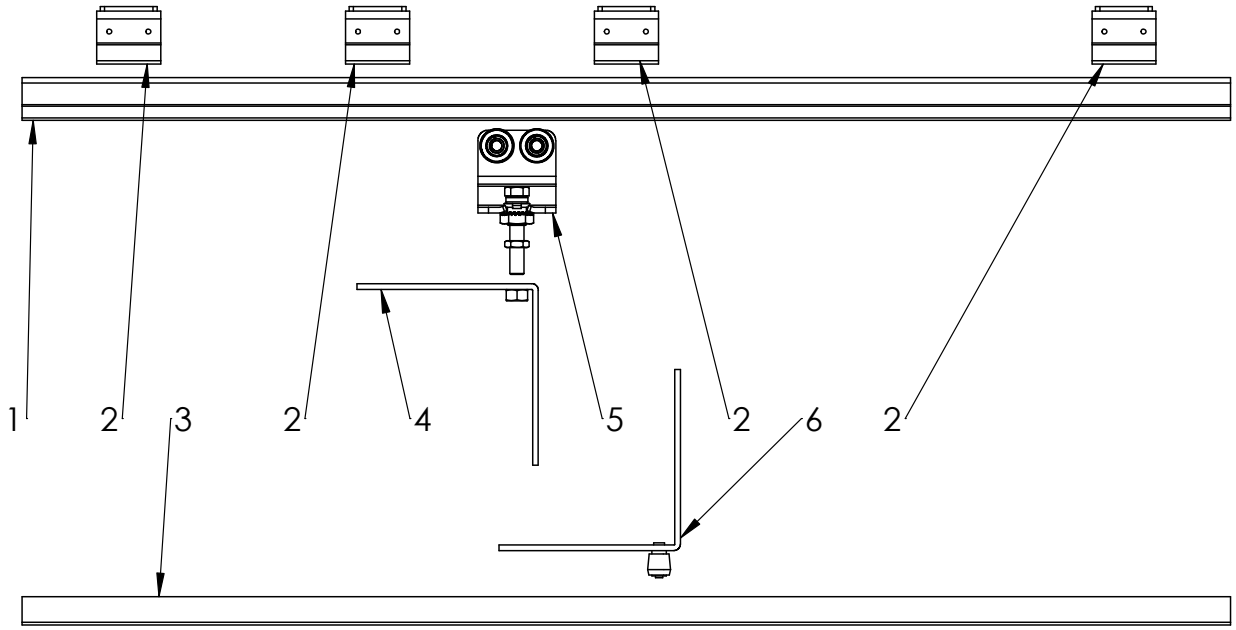

The system includes the following components:
For more details, please refer to Technical Catalogue B1.

1. Track **.000**
The total length of the track profile should be 2 times the width of the wider panel plus 10cm. See page 11.

2. Ceiling support bracket **.B02**
The right selection of support bracket's type depends on the construction on which the track will be fixed.

3. Guide track **3X.000**
For selecting the right guide track profile, please advise our *Technical Catalogue B1.*

4. Top corner bracket **.F94**
Install one top corner bracket every second door panel.

5. Double wheel hanger **.R86**
Install one hanger every second door panel. The right selection of the wheel hanger profile depends on the weight of the panel.

6. Bottom corner guide with roller **.N94**
Install one bottom corner guide roller every second panel.

All components must be of the same NIKO profile. For example, should you be using hanger 23.R86, then track 23.000, support bracket 23.B.., wheel hanger 23.R.. and so on, are required.

1.2.1 General details for track profiles

NIKO Profile No.	Dimensions			
	h (mm)	b (mm)	d (mm)	s (mm)
21.000	28,00	30,00	8,00	1,75
21.050 Stainless steel (304)	28,00	30,00	8,00	1,75
21.070 Stainless steel (316)	28,00	30,00	8,00	1,75
23.000	35,00	40,00	11,00	2,75
23.050 Stainless steel (304)	35,00	40,00	11,00	2,75
23.070 Stainless steel (316)	35,00	40,00	11,00	2,75
24.000	43,50	48,50	15,00	3,20
24.050 Stainless steel (304)	43,50	48,50	15,00	3,20
24.070 Stainless steel (316)	43,50	48,50	15,00	3,00
25.000	60,00	65,00	18,00	3,60
25.050 Stainless steel (304)	60,00	65,00	18,00	3,60
25.070 Stainless steel (316)	60,00	65,00	18,00	4,00
26.000	75,00	80,00	22,00	4,50
27.000	110,00	90,00	25,00	6,50

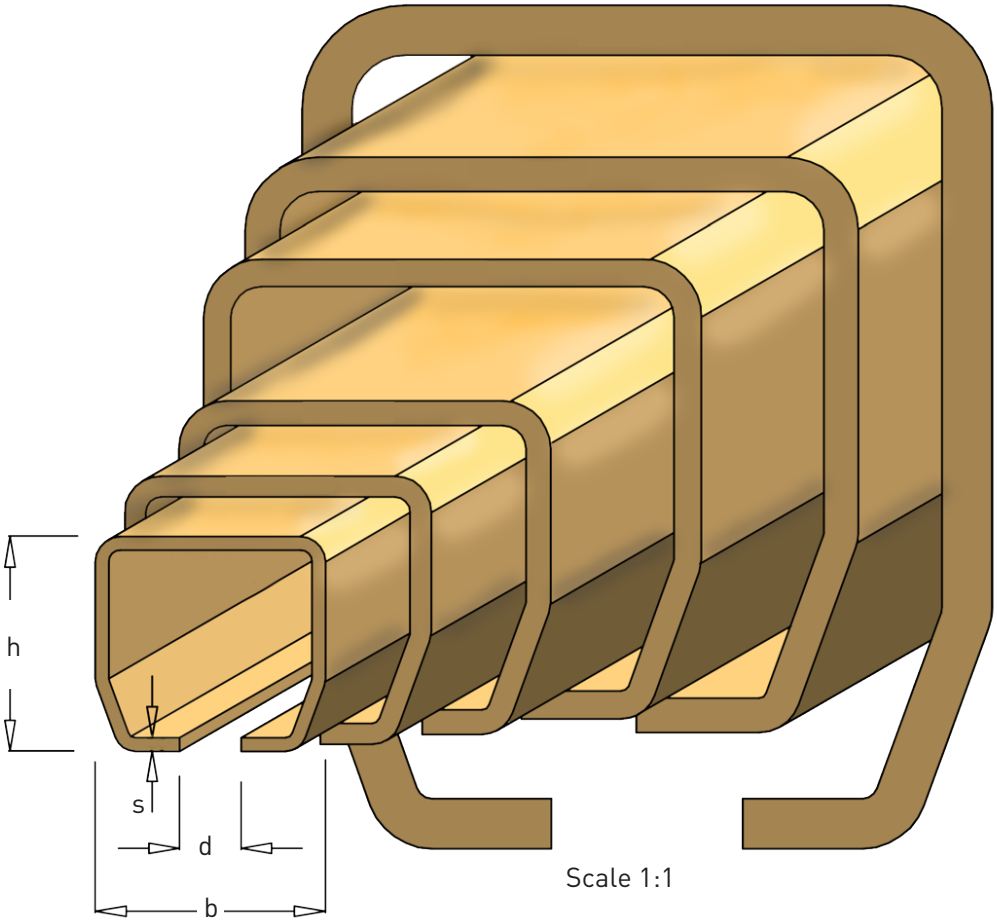

1.2.2 General details for guide track profiles

NIKO Guide track No.	Dimensions		
	h (mm)	B (mm)	s (mm)
32.000	15	15	1
33.000	25	25	2
34.000	40	40	3
35.000	50	60	4

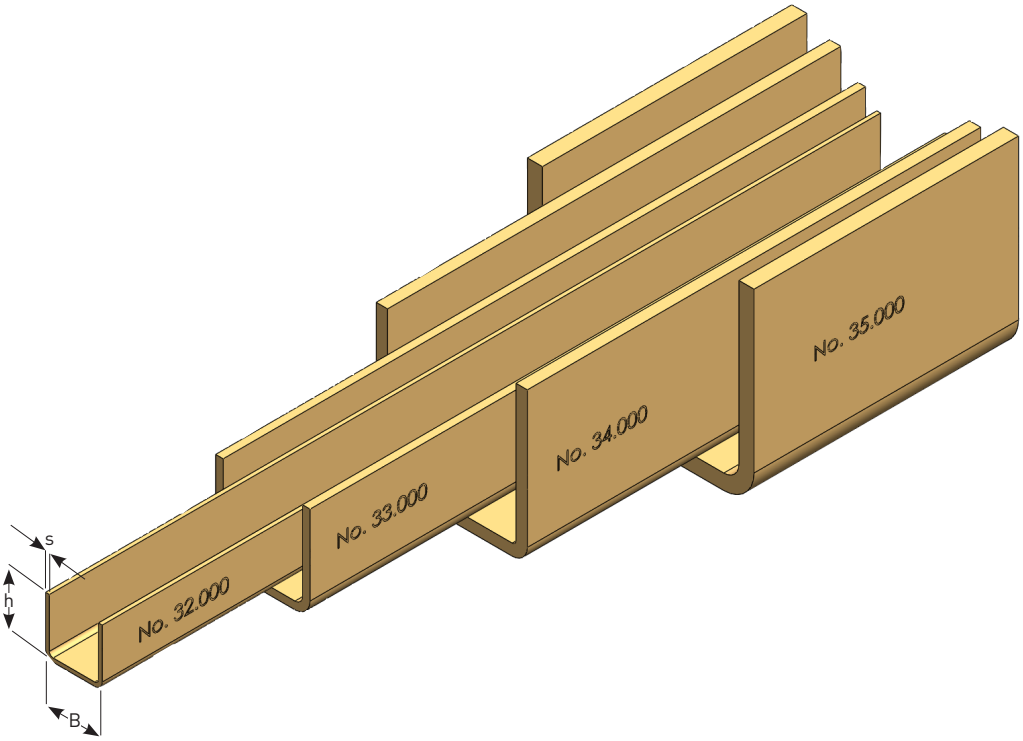

1.3 Technical specifications

Before installing the system, determine:

- ✓ The number of panels
- ✓ The weight of panels
- ✓ Door material
- ✓ Clear passage height
- ✓ Clear opening width
- ✓ Total width
- ✓ Total height

Once you have specified the above data, calculate the number of concealed hinges (not provided) per door.

For door panel height up to 280cm, use 3 hinges per panel.
For panels heighter than 280cm, use 4 hinges per panel.

1.3.1 Chart with allowed loads for wheel hangers

Select the track size according to the weight and dimensions of the door.
Take into consideration that each wheel hanger has to hold the weight of two panels.

4-wheel hanger

NIKO Profile No.	Folding and Harmonica doors Load capacity / kg / Door panel
21.000	22
23.000	42
24.000	75
25.000	150
26.000	300

2-wheel hanger

NIKO Profile No.	Folding and Harmonica doors Load capacity / kg / Door panel
21.000	15
23.000	32
24.000	50
25.000	100
26.000	200

1.3.2 Supporting options

The right selection of support bracket type depends on the construction on which the track will be fixed.

i) Wall support options

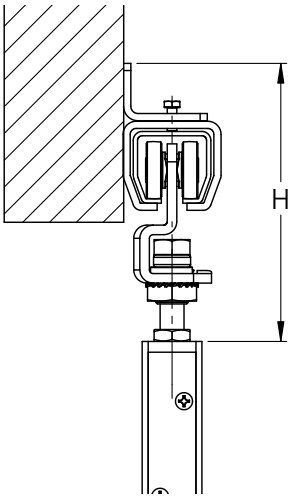

Wall support bracket with wheel hangers for folding doors

NIKO Profile No.	Wall support bracket	Dimension H max. / min.
21.000	21.B01	123/106
23.000	23.B01	157/132
24.000	24.B01	187/170
25.000	25.B01	240/202
26.000	26.B01	368/255

Adjustable wall bracket with height adjustable bracket and wheel hanger for folding doors

NIKO Profile No.	Adjustable wall bracket	Height adjustable bracket	Dimension H max. / min.
21.000	21.B05	21.B04	183/140
23.000	24.B05	23.B04	252/197
24.000	24.B05	24.B04	271/182
25.000	26.B05	25.B04	373/265
26.000	26.B05	26.B04	530/302

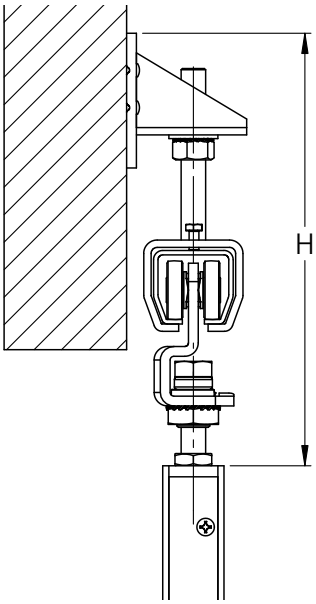

ii) Ceiling support option

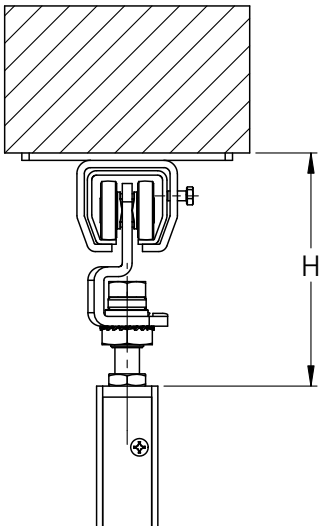

Ceiling support bracket with wheel hangers for folding doors

NIKO Profile No.	Ceiling support bracket	Dimension H max. / min.
21.000	21.B02	101/84
23.000	23.B02	128/103
24.000	24.B02	152/135
25.000	25.B02	198/160
26.000	26.B02	316/203

2 INSTALLATION INSTRUCTIONS
for a typical folding door

2.1 Installation of track, brackets & guide track

STEP 1:
Cut the track at the required length.

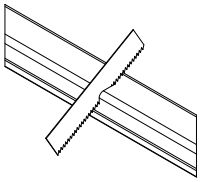

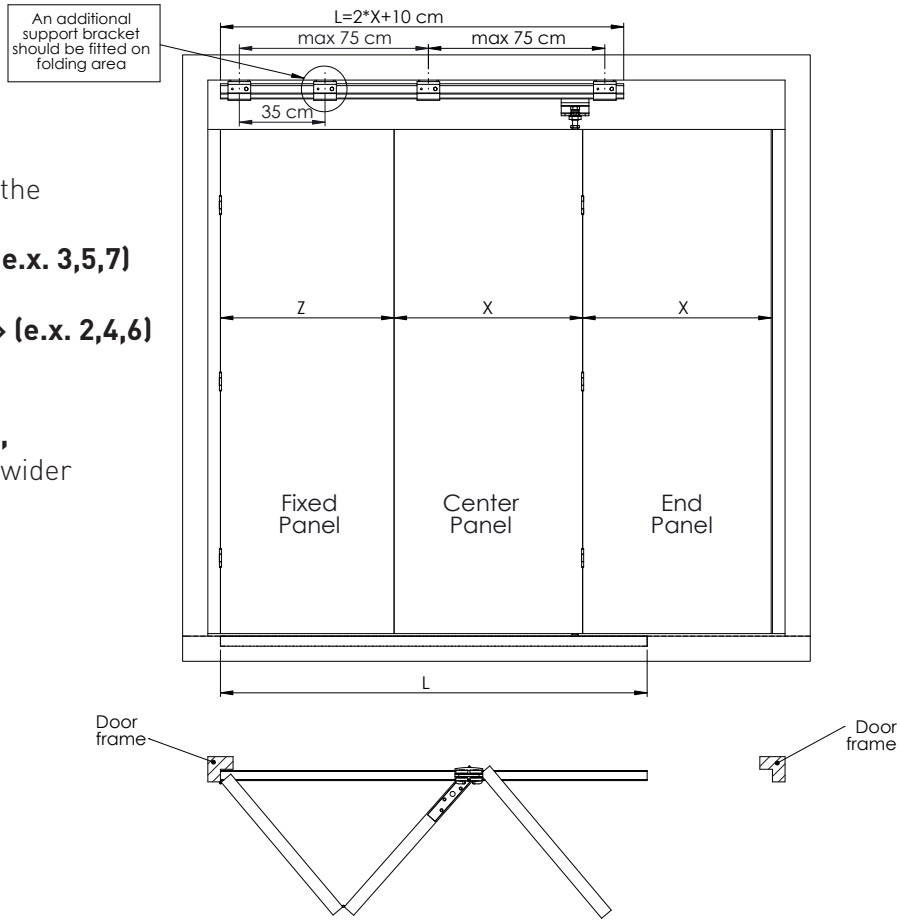

Calculate the track length using the equations below:
1. Odd number of panels - «n» (e.x. 3,5,7)
L = (n-1)*X+10cm
2. Even number of panels - «m» (e.x. 2,4,6)
L = m*X+10cm

For a folding door with 3 panels,
track length should be twice the wider panel width plus 10cm.
L=2*X+10cm
See page 15

STEP 2:
Calculate the number of ceiling support brackets according to the length of the track.

Maximum distance between ceiling support brackets is 75cm.
In the folding area an additional support bracket is required.

Make sure to remove any chips or dirt from inside the track after cutting process as they will damage the wheel hangers and cause noise during operation.

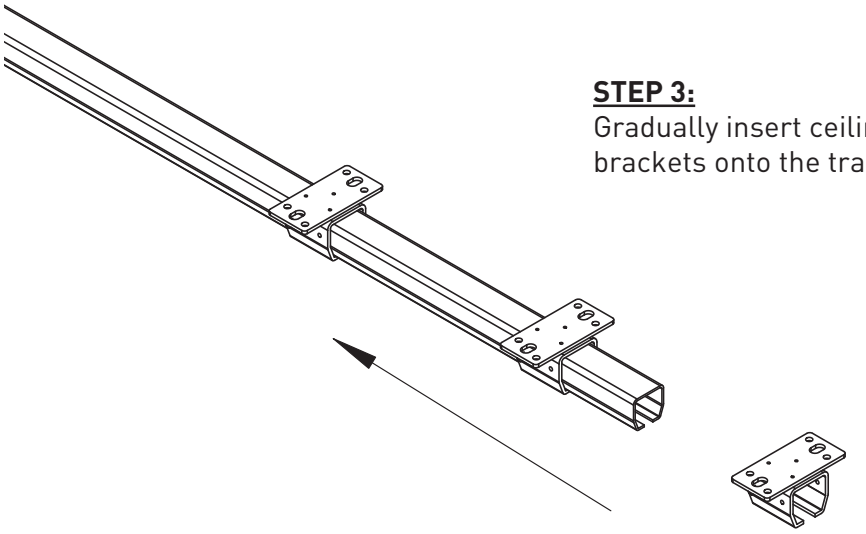

STEP 3:
Gradually insert ceiling support brackets onto the track.

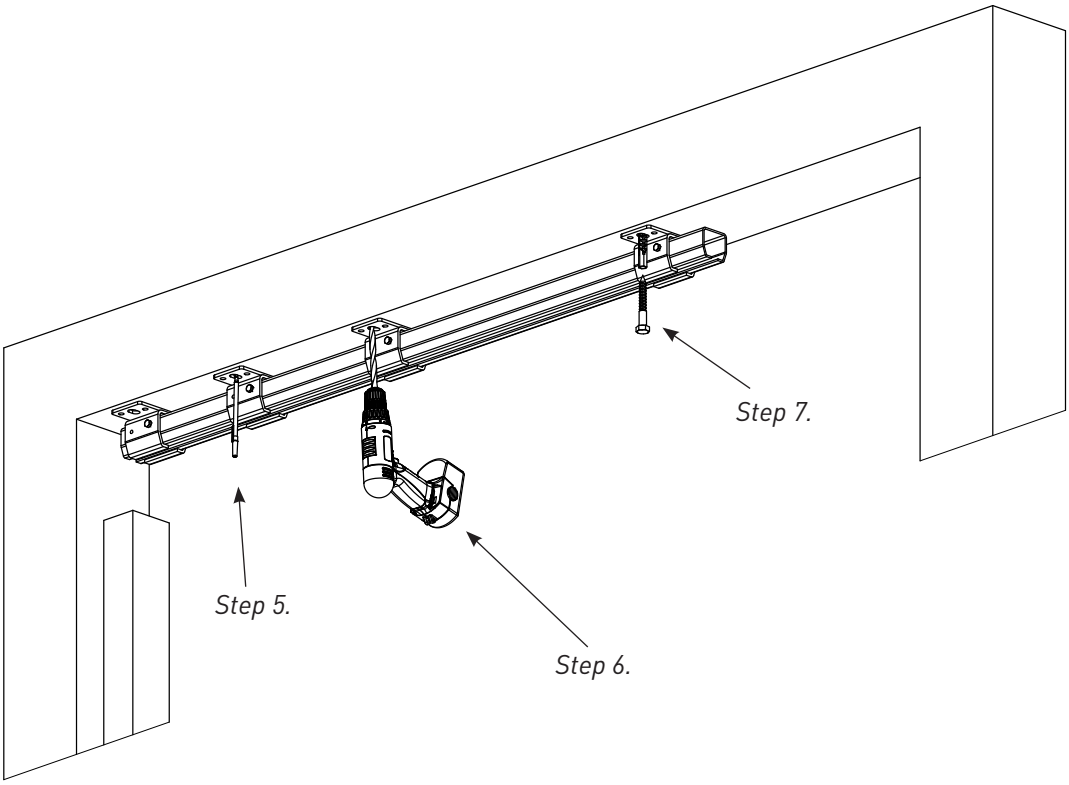

STEP 4:
Place the set ''track-support brackets'' on the construction frame.

STEP 5:
Mark the points where the holes need to be done.

STEP 6:
Lift down the set «track-support brackets» and drill holes at the marks.

STEP 7:
Choose hardware and fasteners according to construction type.
Place back the set and fix support brackets on the existing construction.

It is very important to achieve horizontal alignment because this will result in smooth running.

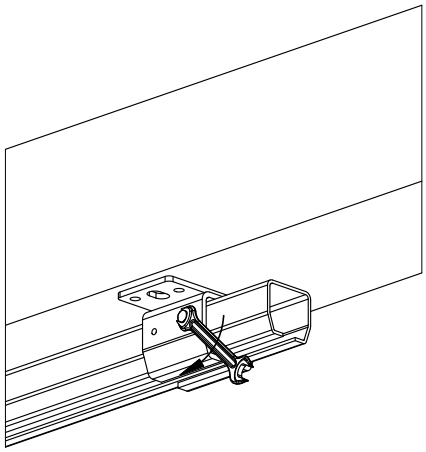

STEP 8:
Tighten the side bolts to fix the track in place.

STEP 9:
Slide double wheel hangers (.R86) into the track in correct orientation.

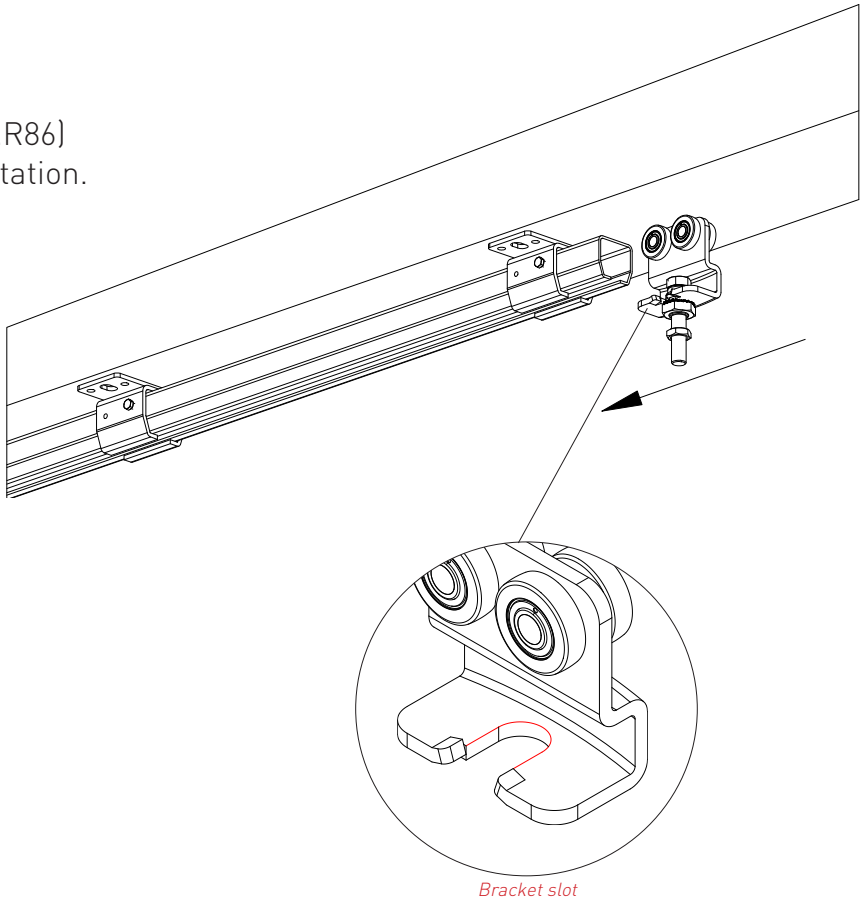

Bracket slot should face the outside.

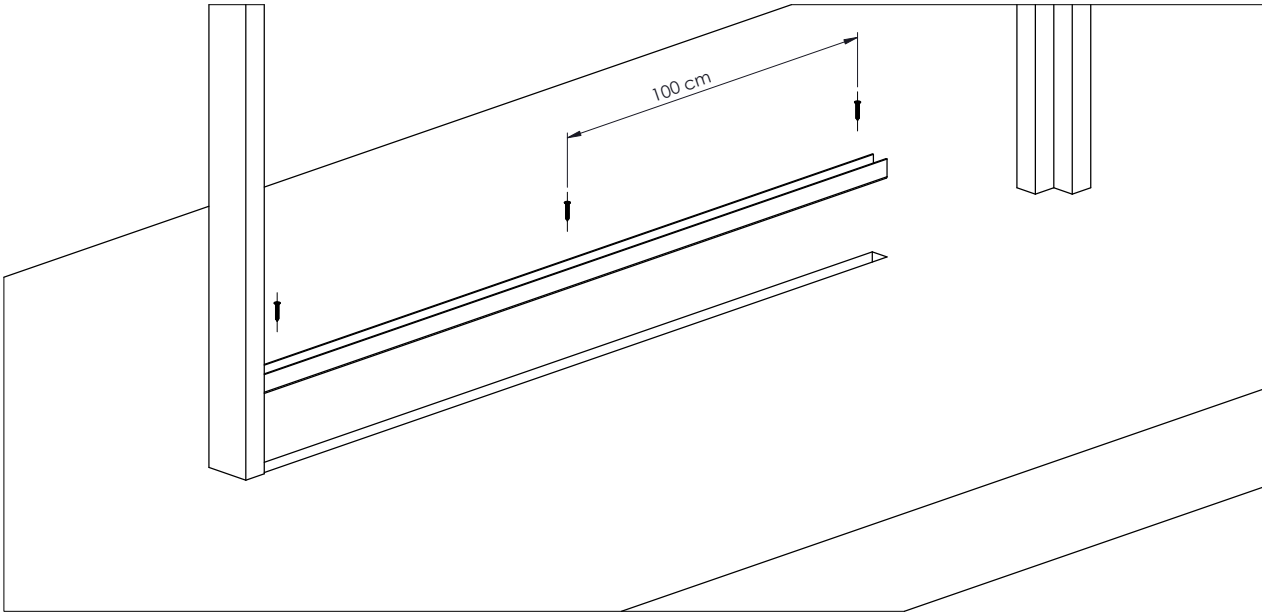

STEP 10: Cut the guide track to the required length.

STEP 11: Cut a notch in the floor with appropriate tool according to guide track dimensions.

STEP 12: Drill holes in guide track 100cm apart.

STEP 13: Fit guide track in the floor notch.

STEP 14: Fix the guide track with chipboard screws.

Guide track and top track must have the same length

Countersink holes to the guide track for preventing protrusion of head screws

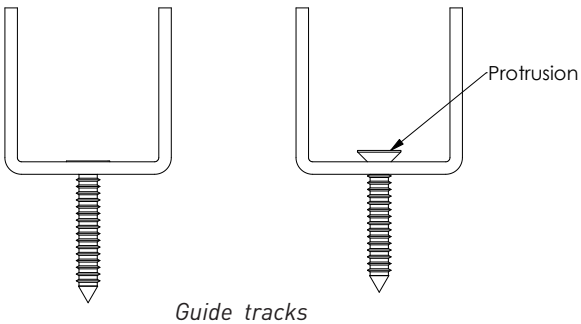

Guide tracks

2.2 Installation of door panels

2.2.1 Calculation of panels width

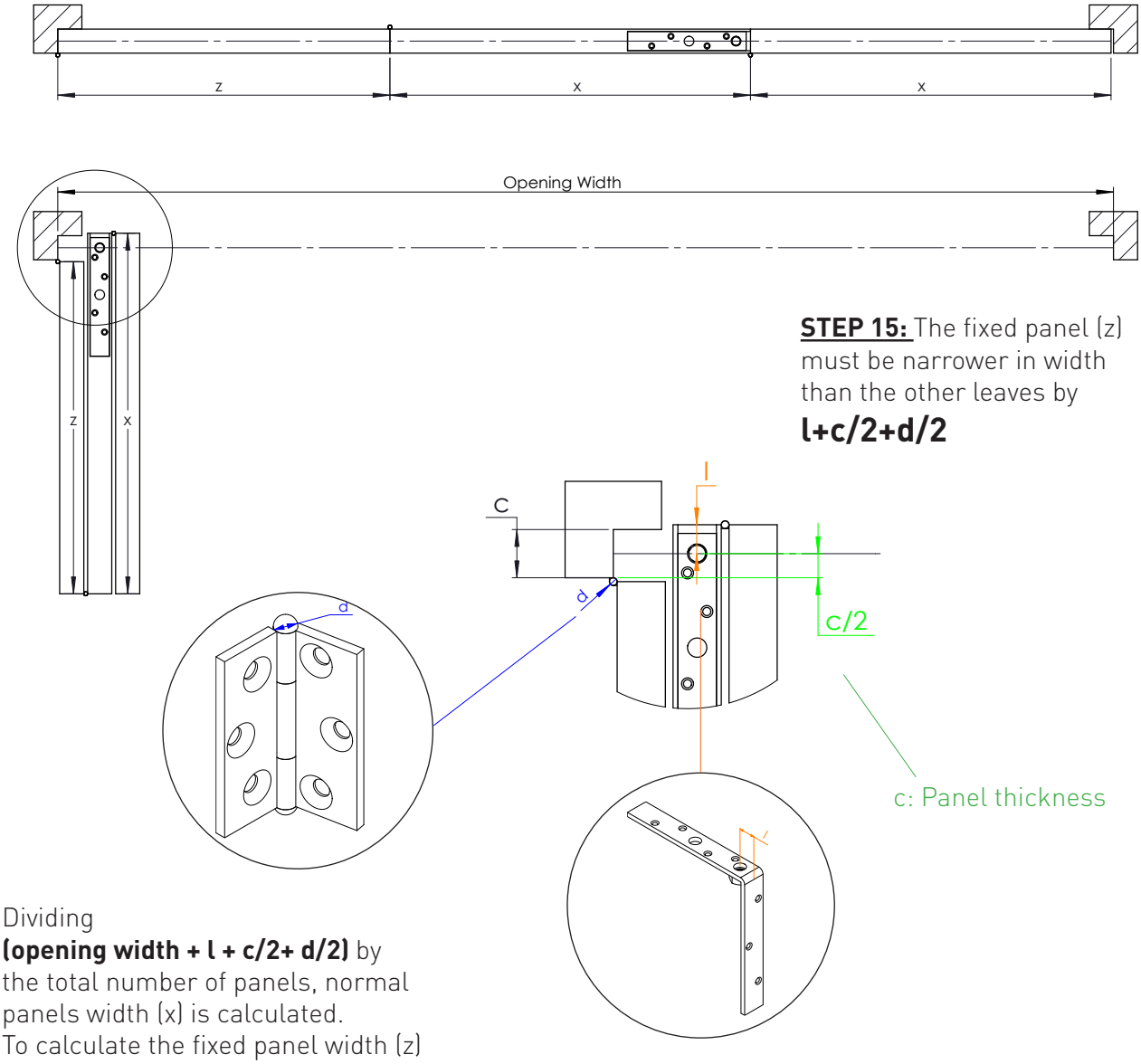

STEP 15: The fixed panel (z) must be narrower in width than the other leaves by **l+c/2+d/2**

c: Panel thickness

Dividing **(opening width + l + c/2+ d/2)** by the total number of panels, normal panels width (x) is calculated.
To calculate the fixed panel width (z) subtract (l + c/2 + d/2) from x.

Example:
3 - leaf end folding door
Clear opening width = **2200mm**
Panel thickness (c) = **40mm**
Hinge diameter (d) = **8mm**
Dimension (l) =**20mm**

Calculation:
2200 + 20 + 20 + 4 = 2243mm
Normal Panel width (x) : 2243 ÷ 3 = 748mm
Fixed panel width (z) : 748-44 = 704mm

2.2.2 Preparation of panels

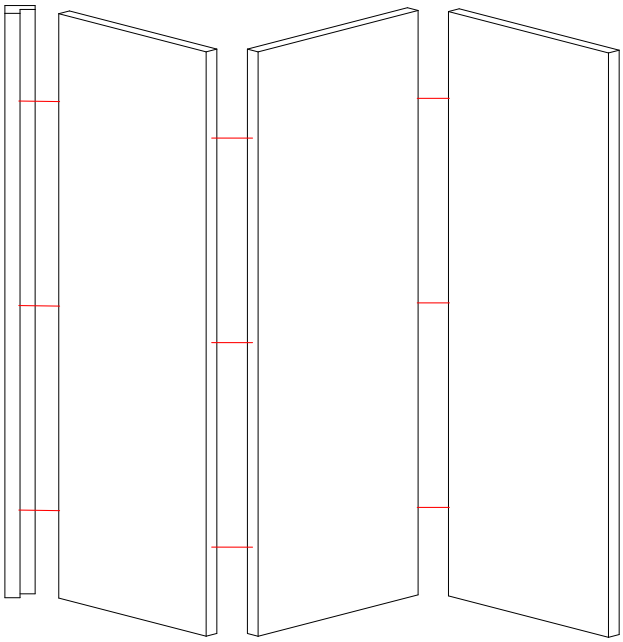

1.

STEP 16:
Make the cut outs in each panel for the hinges to be attached.

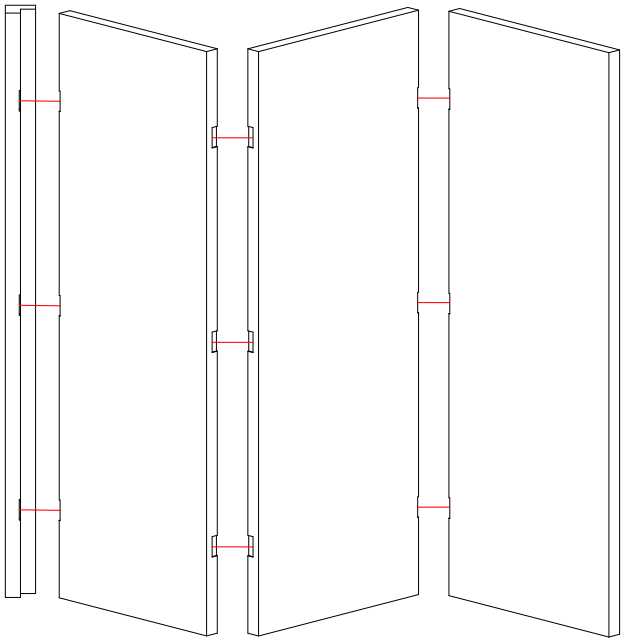

2.

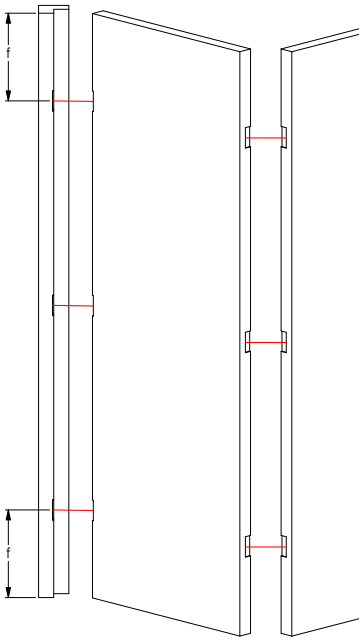

According to the type of hinges (not provided) and the dimensions of top corner bracket (.F94) and guide corner bracket (.N94) , leave a distance from top and bottom edge of the panels.

2.2.2 Preparation of panels

Step 17:
Make a cut out at the top of the center panel for fixing the top bracket, ensuring its dimensions are equivalent to the bracket's dimensions. (1.)

Step 18:
Drill a hole in the cut out for adjusting the bolt of the wheel hanger in following steps. (2.)

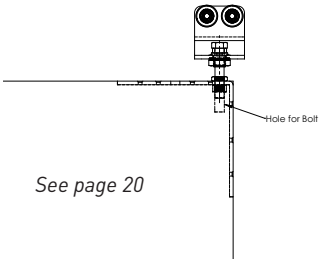

See page 20

Step 19:
Fix the top bracket with countersunk wood screws. (3.)

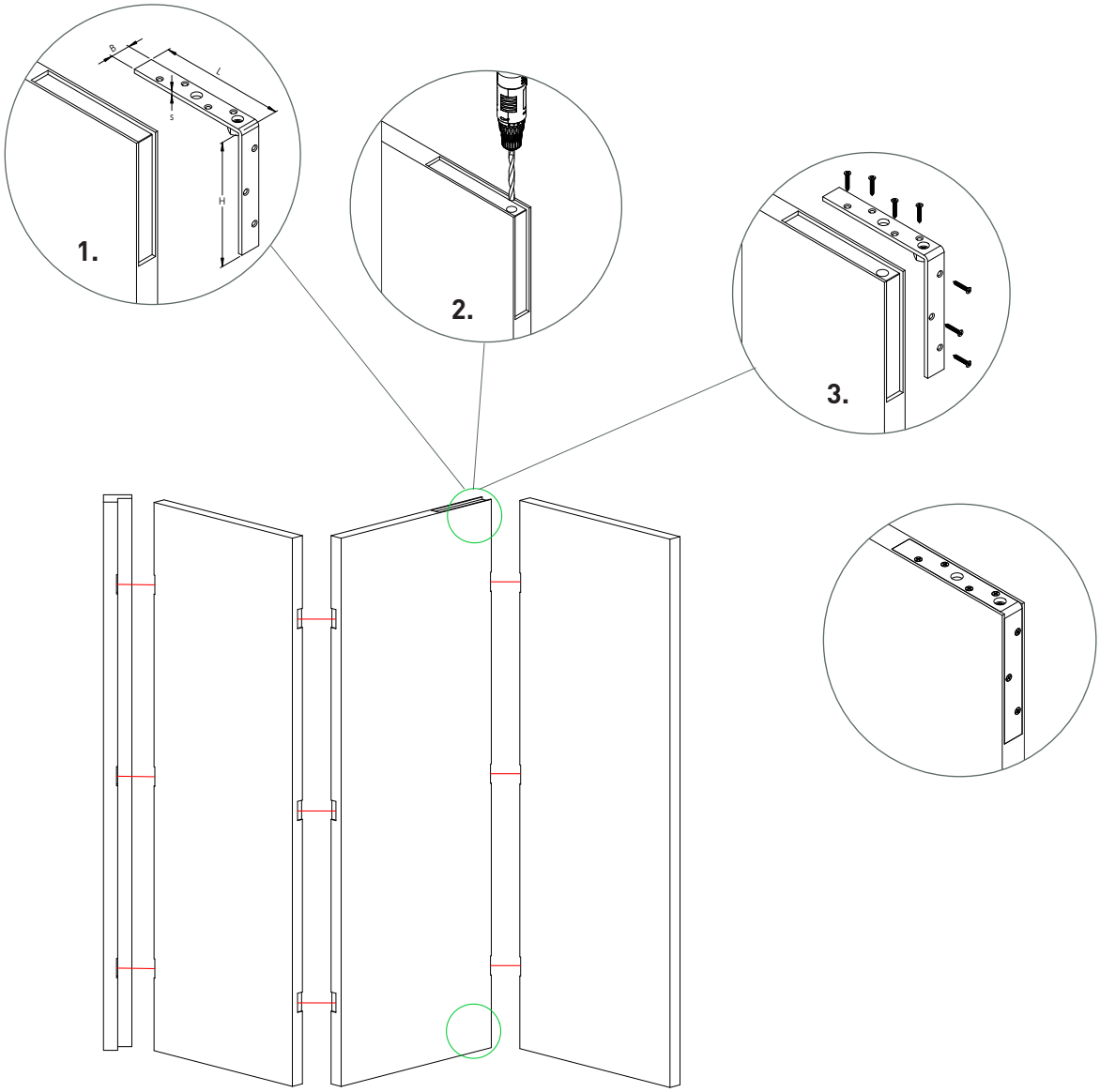

2.2.2 Preparation of panels

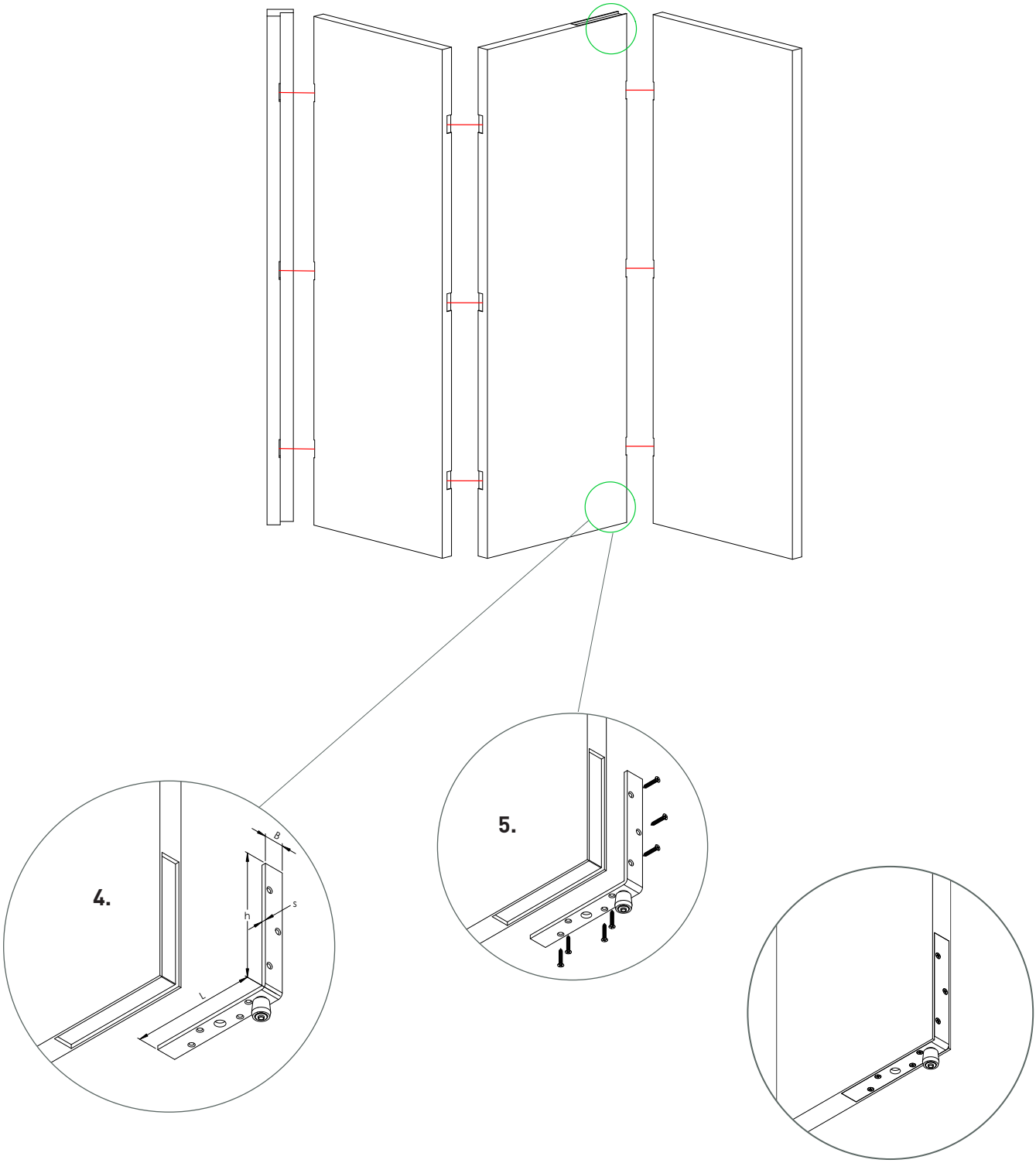

Step 20:
Make a cut out at the bottom of the center panel for fixing the guide corner bracket ensuring its dimensions are equivalent to the bracket's dimensions. (4.)

Step 21:
Fix the guide corner bracket with countersunk wood screws. (5.)

2.2.2 Preparation of panels

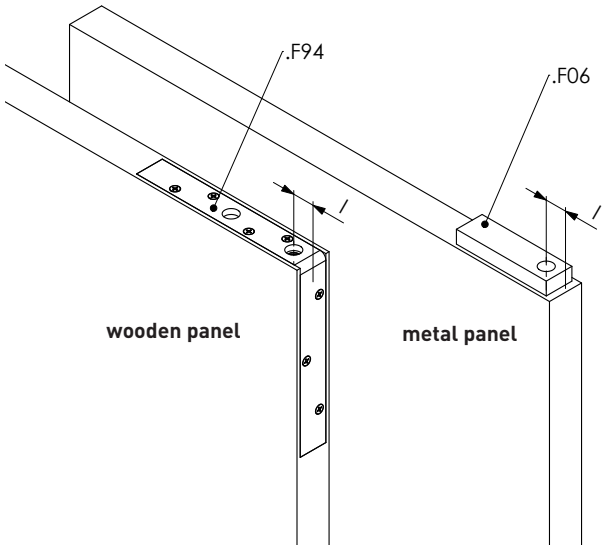

Depending on the panel type (metal frame and bracket .F06) a welding process may be required. The distance from the center of hole to the edge of panel must be the same (dimension l). See Table 2 below.

In case of metal frame select the appropriate bracket (.F06) according to guide roller (.N49/.M49) thread. The distance from the center of roller to the edge of panel must be the same (dimension l). See Table 2 below.

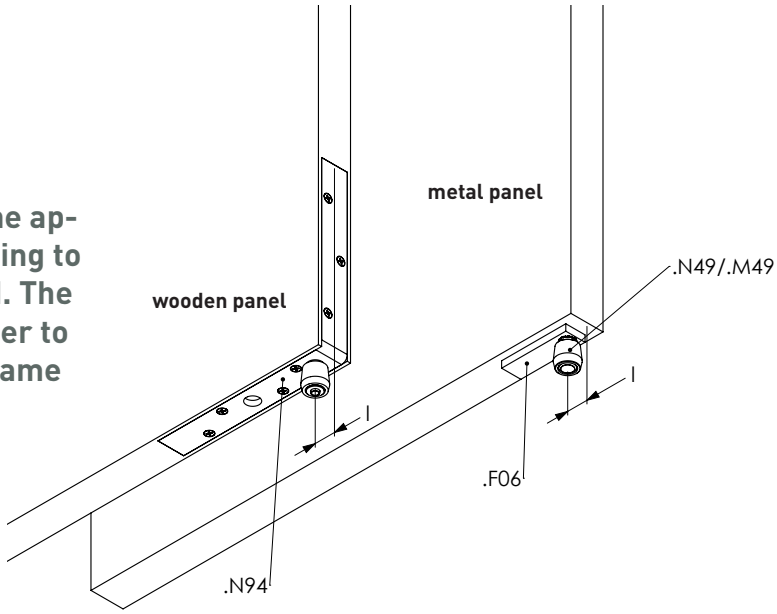

Table 2.

NIKO Profile No.	Bracket for steel constructions .F06	Top corner bracket .F94	Dimension l (mm)
21.000	21.F06	21.F94	15
23.000	23.F06	23.F94	20
24.000	24.F06	24.F94	20
25.000	25.F06	25.F94	30
26.000	26.F06	26.F94	44

2.2.3 Installation of panels

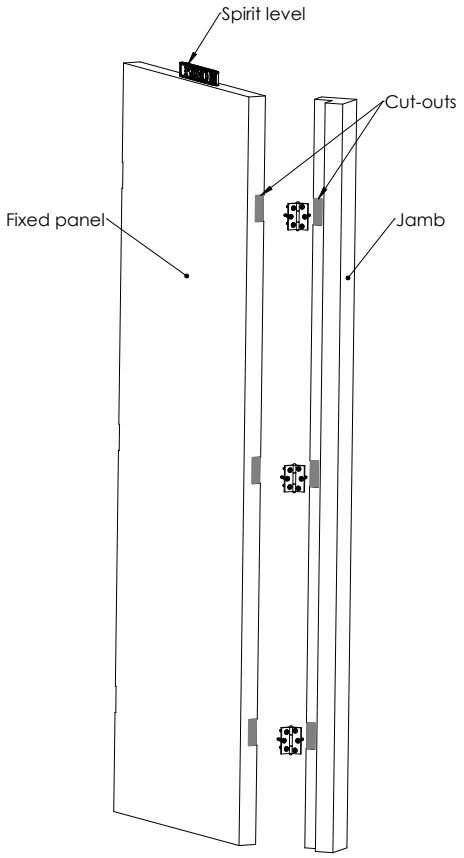

Step 22:
Fix the first panel to the frame of the construction.
Step 23:
Align the panel with a spirit level.
Step 24:
Attach the hinges to the cut outs in both fixed panel and frame.

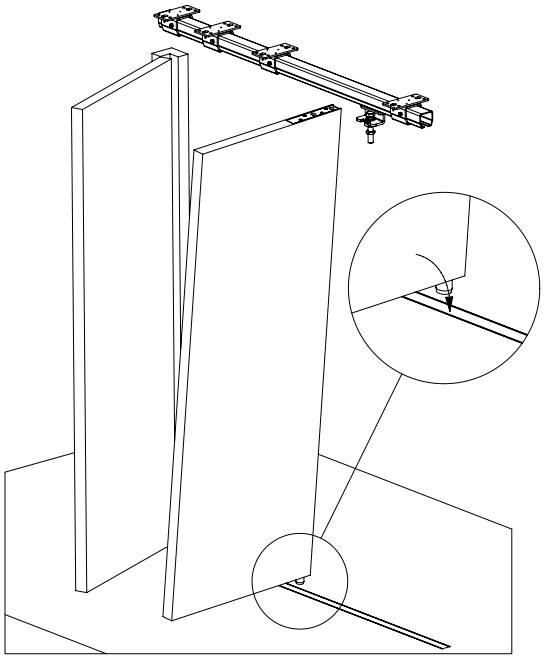

Step 25:
Fit the roller of the bottom guide roller into the guide track.

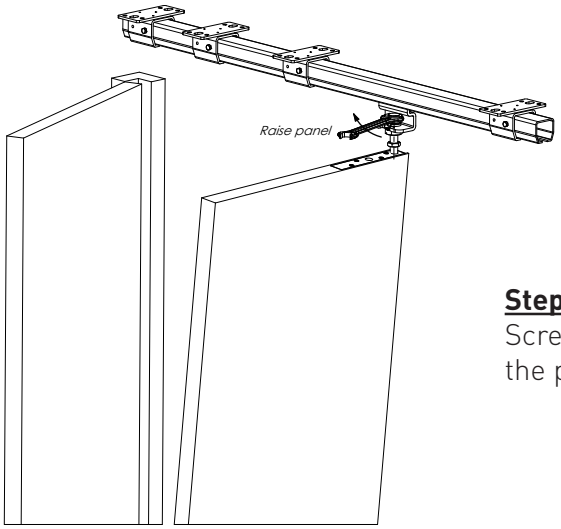

Step 26:
Screw bolt of wheel hanger to adjust the panel.

2.2.3 Installation of panels

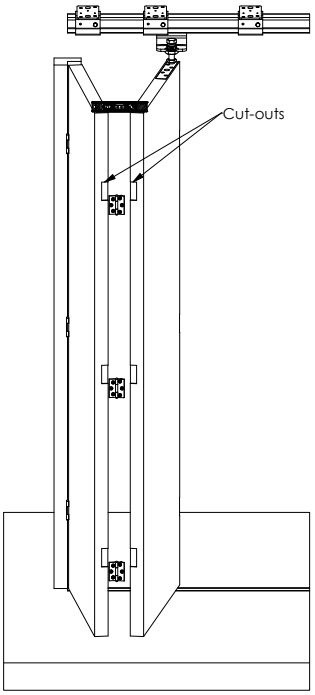

STEP 27:
Align the panel with a spirit level

STEP 28:
Attach the hinges to the cut outs in both fixed and center panel.

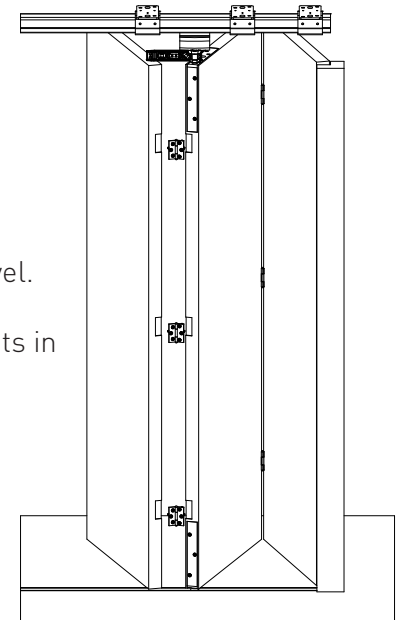

STEP 29:
Fix the end panel.
STEP 30:
Align the panel with a spirit level.
STEP 31:
Attach the hinges to the cut outs in both center and end panel.

STEP 32:
Adjust panels height if required. Screw bolt to adjust the panel.

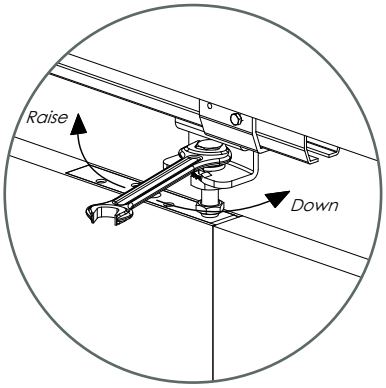

STEP 32.A:
Tighten the nut with appropriate tightening torque. *See Table 1*

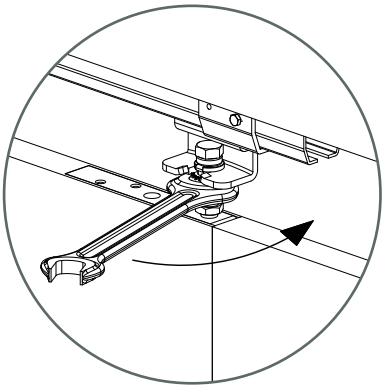

STEP 32.B:
Tighten jam nut so that nut and bracket lock together.

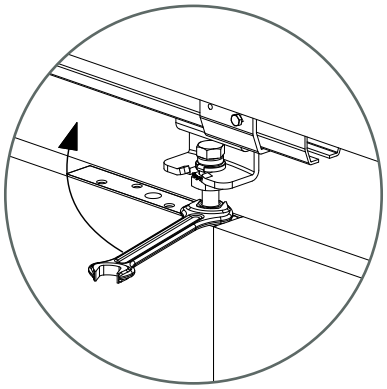

Bolt (Class 8.8)	M6	M8	M16	M12	M16	M20	M24	M30
Torque	10	25	50	87	210	412	711	1422

Table 1.

3 MULTIPLE PANEL FOLDING DOOR

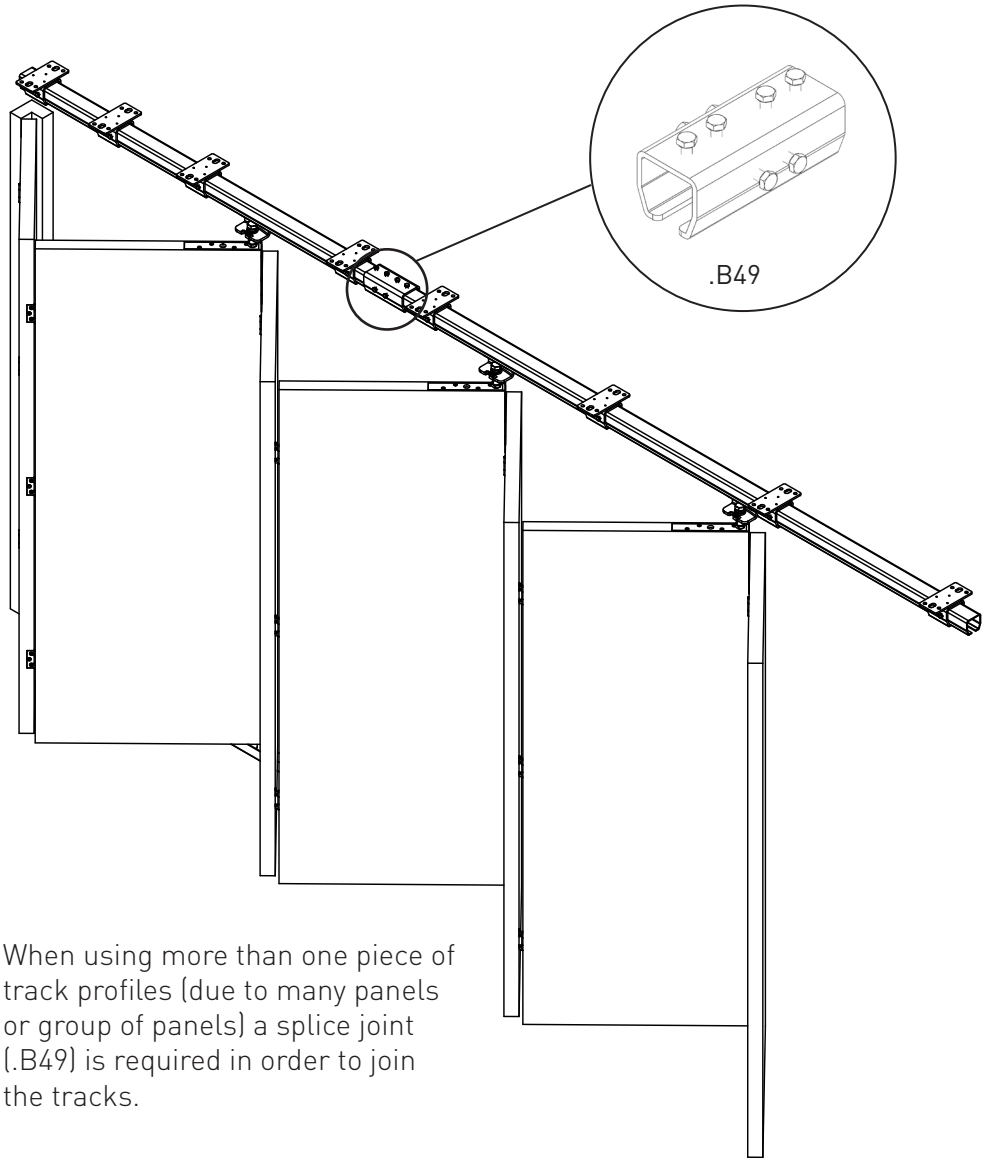

When using more than one piece of track profiles (due to many panels or group of panels) a splice joint (.B49) is required in order to join the tracks.

B49: Installer should follow the next steps:

STEP 1: The edges of each track enter the joint and meet in the centre.

STEP 2: The four bolts at the top of the joint have to be bolted so that the track has tight contact with the joint, creating a flat running surface through the joint.

STEP 3: The four side bolts are used to achieve horizontal alignment within the joint.

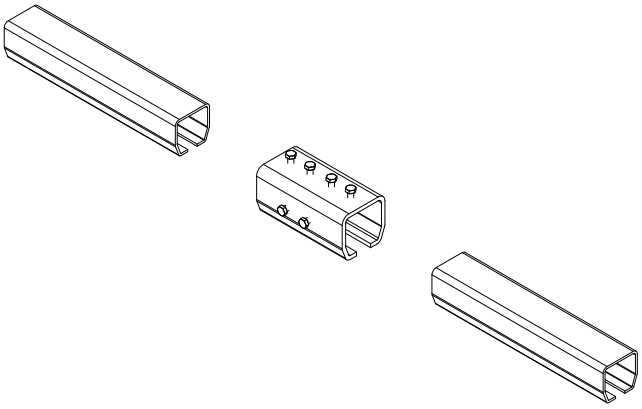

3 Multiple panel folding door

Important information for multiple panel folding door system

When you are using splice joint it is necessary to place support brackets at the right and left side of the splice joints with the minimum distance between the joint and the bracket.

An odd number of panels indicates that the last panel will operate as an opening door. At the bottom of previous panel a stabilization latch must be installed.

An application with 2 group of panels, requires that at least the one of them has to have odd number of panels so when groups meet in the middle, the wheel hangers won't hit each other.

For wide door openings, NIKO recommends two groups of panels (one group folds at the right side and the other at the left). For optimal operation, when having one group of panels, do not use more than 7 panels.

Care must be taken with the following:

✓ Alignment of the two parts both to horizontal and vertical level is absolutely necessary in order to avoid any problem to trolleys rolling inside the tracks. The gap between the two parts of track must be as small as possible.

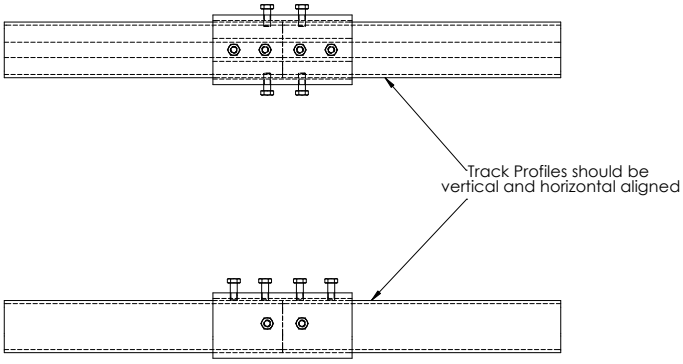

✓ Pay particular attention when supports are used around a splice joint. The joint is used only for connection and does not support any load. The joint must be supported either side by additional support brackets. These supports must not be omitted.

4 FOLDING DOOR - HARMONICA TYPE

4.1 Example of folding door with four and half panels

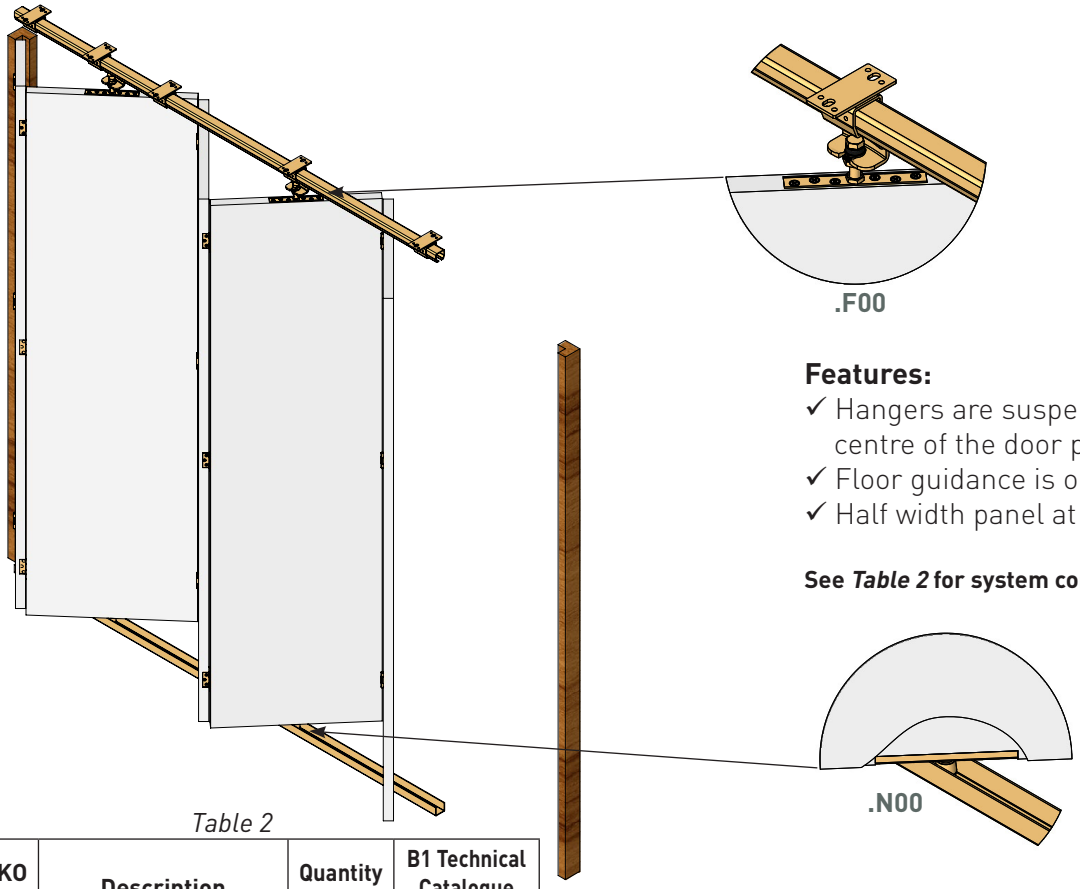

Features:

- ✓ Hangers are suspended at the centre of the door panel
- ✓ Floor guidance is optional
- ✓ Half width panel at beginning

See *Table 2* for system components

Table 2

NIKO Item	Description	Quantity (pcs)	B1 Technical Catalogue page
Track		1	23
.B02	Ceiling support bracket	5	27
.R86	Wheel hanger	2	43
.F00	Bracket	2	56
.N00	Guide with roller	2	68
.000	Guide track	1	62

4.1.1 Calculation of panels width

Dividing **(opening width + c/2* + d/2**)** by the total number of half panels, the width of the half normal panel is calculated. Multiply by 2 (x2) to calculate normal panel width.
To calculate the fixed panel width, subtract (c/2+d/2) from the half normal panel width.

One normal panel (x) is 2 half panels.

Example: 4 and 1/2 folding door panels
Clear opening width = 3000mm
Panel thickness (c) = 40mm
Hinge diameter (d) = 8mm

Calculation:
3000 + 20 + 4 = 3024mm
Half Normal Panel width (x/2) : 3024 ÷ 9 = 336mm
Normal panel width (x) : 336 x 2 = 672mm
Fixed panel width (z) : 336 - 24 = 312mm

**c: Panel thickness (See page 14)*
***d: Hinge diameter (See page 14)*

5 BASIC RULES
for safety - operation

Meaning of symbols

⚠	WARNING CAUTION	Warns you about the health and indicates possible risks of injury or risks to the machine/other objects
⊘	PROHIBITED	Indicates an action that is not permitted
ⓘ	NOTE	Highlights tips and information for you

FOLDING DOOR ELEMENTS

⚠ The panel weight must not exceed the maximum lifting capacity of wheel hangers. Every second panel, a wheel hanger must be installed.

⚠ No change should be made nor intervention in the basic elements of folding door system by unauthorised personnel.

⚠ Ensure that the frame (casing) can endure the weight of the door. A frame without sufficient strength may result in improper and slower movement of the system or it may cause the door to drop down.

⚠ Only trained personnel must be involved with installation and operation. If the system is not installed correctly, the door will not operate smoothly, and or may cause injury.

ⓘ It is recommended that the folding system should be installed by at least two people. One person could handle the door panel while the other adjust and install the folding system hardware.

⊘ Do not try to use this product for any other purposes than the one described in this manual.

⊘ Do not use the parts for applications that are out of specification.

PERSONAL SAFETY

⚠ People involved in the installation process should always wear protective clothing.

⚠ Never put your hand inside the track during operation.

DISPOSAL

Dispose in accordance with local, state and national regulations.

GENERAL RULES

✓ Once the installation has been completed, make sure to check that the finished product is safe and well-functioning.

✓

Wall requirements and fixings:

✓ The substructure /wall must be level and vertical and able to bear permanent loads.

✓ Depending on the door weight and the substructure/wall , fixings must be sufficiently dimensioned.

6 INSPECTION AND MAINTENANCE
Schedule

The first inspection should be done one month after the folding door's installation.
At that time, the following should be checked:

- ✓ Horizontal and vertical alignment of the track profile must be checked.
- ✓ All the elements of the folding door have to be inspected for any unusual wear-out.
- ✓ All the bolts and nuts should be properly tightened.
- ✓ All splice joints have to be aligned correctly.
- ✓ All the wheel hangers have to roll smoothly.

Even though "NIKO®" folding door systems do not require any special maintenance, periodic checks should be done. These checks combined with proper installation increase the system's lifetime. A check and maintenance table appears below:

DOOR ELEMENT	EVERY 3 MONTHS	EVERY 6 MONTHS	ANNUALLY
TRACK	VISUAL INSPECTION (OPERATOR)		CHECK FOR CORROSION OR SIGNS OF DEFORMITY. CLEAN INSIDE THE TRACK (MAINTENANCE PERSONNEL)
SPLICE JOINT	VISUAL INSPECTION FOR HORIZONTAL AND VERTICAL ALIGNMENT (OPERATOR)		CHECK ALL BOLTS ARE TIGHTENED PROPERLY (MAINTENANCE PERSONNEL)
SUPPORT BRACKETS	VISUAL INSPECTION FOR ANY MOVEMENT (OPERATOR)		CHECK ALL BOLTS ARE TIGHTENED PROPERLY (MAINTENANCE PERSONNEL)
WHEEL HANGERS	CHECK FOR SMOOTH OPERATION AND MOVEMENT. CHECK ALL THE BOLTS AND NUTS ARE TIGHTENED PROPERLY. (OPERATOR)	1) CHECK FOR CORROSION IN ALL MOVING PARTS 2) CHECK ALL THE BOLTS AND NUTS ARE TIGHTENED PROPERLY (MAINTENANCE PERSONNEL)	UNINSTALL ALL THE WHEEL HANGERS. CHECK FOR UNUSUAL WEAR OR CORROSION. ESPECIALLY CHECK THE SMOOTH OPERATION OF THE BEARINGS AND THAT THE BOLTS AND THE NUTS ARE PROPERLY TIGHTENED. (MAINTENANCE PERSONNEL)

Make sure to test the screws for slack at regular inervals.
(1 month after first usage, half year and then one time every year is recommended).

Notes

NIKO HELM HELLAS S.A.
MANUFACTURERS OF SLIDING DOOR FITTINGS AND CONVEYOR SYSTEMS

TERMS AND CONDITIONS FOR THE SALE OF GOODS

§ 1.Preamble

1.These Standard Terms and Conditions for the sale of export Goods shall exclusively apply, save as varied by express agreement accepted in writing by both parties. 2.The offer, order acknowledgement, order acceptance or sale of any products covered herein is conditioned upon the terms contained in this instrument. Any conditional or different terms proposed by the buyer are objected to and will not be binding upon the seller unless assented in writing by the seller. Our Terms and Conditions apply exclusively also in the case of goods being delivered without reservation to the buyer despite our full awareness of contradicting or varying terms and conditions of the buyer.3.These conditions shall govern any future indivudual contract of sale between the seller and the buyer to the exclusion of any other terms and conditions subject to which any such quotation is accepted or purported to be accepted, or any such order is made or purported to be made, by the buyer. 4.Any typographical, clerical or other error or omission in any sales literature, quotation, price list, acceptance of offer, invoice or other document of information issued by the seller shall be subject to correction without any liability on the part of the seller. 5.The provisions of these Standard Terms and Conditions extend to standard contract conditions which are used in a contract with a merchant in the course of business only and apply only to companies, legal persons under public law or public special assets.

§ 2.Orders and Specifications

1.No order submitted by the buyer shall be deemed to be accepted by the seller unless and until confirmed in writing by the seller or the seller's representative within 2 weeks after submittal.2.The quantity and description of and any specification for the goods shall be those set out in the seller's quotation or the buyer's order.3.Any such specification, sales literature, quotation etc. shall be strictly confidential and must not be made available to third parties. 4.The buyer shall be responsible for the seller for ensuring the accuracy of the terms of any order submitted by the buyer, and for giving the seller any necessary information relating to the goods within a sufficient time to enable the seller to perform the contract in accordance with its terms.5.If the goods are to be manufactured or any process is to be applied to the goods by the seller in accordance with the specification submitted by the buyer, the buyer shall indemnify the seller against all loss, damages, costs and expenses awarded against or incurred by the seller in connection with infringement of any patent, copyright, design, trade mark or other industrial or intellectual property rights of any other person which results from the seller's use of the buyer's specification.6.The seller reserves the right to make any changes in the specification of the goods which are required to conform with any applicable statutory requirements or, where the goods are to be supplied to the seller's specification, which do not materially affect their quality or performance.

§ 3.Price of the Goods

1.The price of the goods shall be the seller's quoted price or, where no price has been quoted the price listed in the seller's published price list current at the date of acceptance of the order. 2.The seller reserves the right, by giving notice to the buyer at any time before delivery, to increase the price of the goods to reflect increase in the cost to the seller which is due to any factor beyond the control of the seller (such as foreign exchange fluctuation, currency regulation, alteration of duties, significant increase in the cost of materials or other costs of manufacture) or any change in delivery dates. 3.Except as otherwise stated under the terms of any quotation or in any price list of the seller, and unless otherwise agreed in writing between the buyer and the seller, all prices are given by the seller on an ex works basis, and where the seller agrees to deliver the goods otherwise than at the seller's premisses, the buyer shall be liable to pay sellers charges for transport.4.The seller bears the cost of the usual packaging; charges for special packaging will be borne by the buyer 5.On buyers request, the seller will insure the goods at the expense of the buyer.6.Prices are exclusive of VAT, which must then be paid to the seller additionally.

§ 4.Terms of Payment / Prepayments

1.The buyer shall pay the price of the goods immediately upon receipt of invoice, unless a payment deadline is granted in the invoice.2.Payment shall be effected by inter bank payment transaction only; no cheque or bill of exchange will be considered as fulfillment of the payment obligation.3.It may be agreed between the parties that the buyer has to deliver a letter of credit issued by his bank (or any bank acceptable to the seller). In this individual case it is assumed that any letter of credit will be issued in accordance with the Uniform Customs and Practice for Documentary Credits, 1993 Revision; ICC Publication No. 500. 4.If the buyer fails to make any payment on the due date then, without any prejuce to any other right or remedy available to the seller, the seller shall at his discretion be entitled to:

- cancel the contract or suspend any further deliveries to the purchaser; or
- charge the buyer interest on the amount unpaid, at the rate of 4 per cent per annum above Federal Reserve Bank Rate/Bundesbank Discount Rate from then being valid, until payment in full is made. The buyer shall be entitled to prove that the delay of payment caused no or little damage only.

5.Advancements, prepayments and installments paid by the buyer to the seller regarding customized goods or goods which empirically have a rare demand are not refundable by the seller . 6.Payments will first be applied to accumulated costs, then to interest and then to the oldest main demand.

§ 5.Delivery

1.Delivery of the goods shall be made by the buyer collecting the goods at the seller's premises at any time after the seller has notified the buyer that the goods are ready for collection or, if some other place for delivery is agreed by the seller, by the seller delivering the goods to that place.2.If a fixed time for delivery is provided for in the contract, and the seller fails to deliver within such time or any extension thereof granted, the buyer shall be entitled, on giving notice in writing to the seller within a reasonable time, to claim a reduction of 0,5 % per week (and up to a maximum of 5%) of the price payable under the contract, unless it can be reasonably concluded from the circumstances of the particular case that the buyer has suffered no loss. This limit shall not apply if the business had to be settled on a fixed date or if the delay was caused negligently or intentionally by the seller, his agents or representatives or if there is any future breach of any essential contractual obligation.3.If for any reason whatever the seller fails within such time to effect delivery, the buyer shall be entitled by notice in writing to the seller to fix a deadline after the expiry of which the buyer shall be entitled to terminate the contract. After the expiry of the above mentioned fix deadline the buyer may also recover from the seller any loss suffered by the buyer by reason of the failure of the seller.4.If the buyer fails to accept delivery on due date, he shall nevertheless make any payment conditional on delivery as if the goods had been delivered. The seller shall arrange for the storage of the goods at the risk and cost of the buyer. If required by the buyer the seller shall insure the goods at the cost of the buyer.

§ 6.Transfer of Risk

Risk of damage to or loss of the goods shall pass to the purchaser as follows:

- in the case of goods to be delivered otherwise than at the seller's premises, at the time of the delivery or, if the buyer wrongfully fails to take delivery of the goods, the time when the seller has tendered delivery of the goods;
- in the case of goods to be delivered at the seller's premises ("ex works", Incoterms 2000) at that time when the seller notifies the purchaser that the goods are available for collection.

§ 7.Risk of damage to or loss of the goods shall pass to the purchaser as follows:

- in the case of goods to be delivered otherwise than at the seller's premises, at the time of the delivery or, if the buyer wrongfully fails to take delivery of the goods, the time when the seller has tendered delivery of the goods;
- in the case of goods to be delivered at the seller's premises ("ex works", Incoterms 2000) at that time when the seller notifies the purchaser that the goods are available for collection.

1.Notwithstanding delivery and the passing of risk in the Goods, or any other provision of these conditions, the property in the goods shall not pass to the buyer until the seller has received payment in full of the price of the goods and all other goods agreed to be sold by the seller to the buyer for which payment is then due.2.After termination of the contract the seller shall have absolute authority to retake, sell or otherwise deal with or dispose of all or any part of the goods.3.Until such time as the property in the goods passes to the buyer, the buyer shall hold the goods as the seller's fiduciary agent, and shall keep the goods properly stored, protected and insured.Until that time the buyer shall be entitled to resell or use the goods in the ordinary course of business, but shall account to the seller for the proceeds of sale or otherwise of the goods including insurance proceeds, and shall keep all such proceeds separate from any moneys or properties of the buyer and third parties.4.The buyer is only entitled to further disposal or processing in consideration of the following conditions:

- The buyer may only dispose of or process the reserved merchandise in a proper business office and only if there is no lasting decline in his financial circumstances.
- The buyer herewith transfers the demand with all secondary rights resulting from sales of the reserved merchandise -including possible balance demands- to the seller.
- If the goods are processed or reshaped by the buyer and if processing is done with goods that the seller has no property in, the seller shall become co-owner of the goods. The same shall apply if the seller's goods are completely reshaped and mixed with other goods.
- If the buyer has sold the demand within the bounds of a real factoring, he will transfer the newly resulting demand of the factor to the retailer and will forward him a share of his sales proceeds amounting to the value of the seller's right on the merchandise. The buyer is obligated to reveal the transfer to the factor if he is more than 10 days overdue with the payment of an invoice or if his financial circumstances decline substantially. The seller accepts this transfer.

5.If third parties take up steps to pledge or otherwise dispose of the goods, the buyer shall immediately notify the seller in order to enable the seller to seek a court injunction. If the buyer fails to do so in due time he will be held liable for any damages caused.6.The seller shall on demand of the buyer release any part of the collateral if the value of the collateral held in favour of the seller's decision to release those parts of the collateral suitable for him.

§ 8.Warranties, exclusion clauses and limitation period

1.The buyer shall examine the goods as required and raise any objections within 8 days after receiving the goods. 2.The seller warrants that all items delivered under this agreement will be free from defects in material and workmanship, conform to applicable specifications, and, to the extent that detailed designs have not been furnished by the buyer, will be free from design defects and suitable for the purposes intended by the buyer.3.The seller shall not be liable for the normal process of wearing down during use of the goods and goods being fit for a particular purpose unless otherwise agreed upon, to which the buyer intends to put them. 4.The above warranty is given by the seller subject to the following conditions:

- the seller shall not be liable in respect of any defect in the goods arising from any design or specification supplied by the buyer;
- the seller shall not be liable under the above warranty if the total price for the goods has not been paid by the due date for payment;
- the above warranty does not extent to parts, materials or equipment manufactured by or on behalf of the buyer unless such warranty is given by the manufacturer to the seller.

5.This warranty does not cover defects in or damage to the products which are due to improper installation or maintenance, misuse, neglect or any cause other than ordinary application.6.Any discharge from liability will be void if a defect results from negligent or intentional breach of contract on the part of the seller. The same applies if the seller may be held responsible for the breach of any further essential contractual obligation.7.The buyer is entitled to demand the delivery of any substitute goods, or repair.8.Where any valid claim in respect of any goods which is based on any defect in the quality or condition of the goods or their failure to meet specification is notified to the seller in accordance with these conditions, the seller shall be entitled at the seller's sole discretion to either replace the goods free of charge or repair the goods. If the seller is neither ready nor able to either repair or replace the goods the buyer shall be entitled at the buyer's sole discretion to claim for a reduction of price or a cancellation of the contract.9.All the purchaser's demands concerning defects will lapse within a limitation period of 1 year as of the legal lapse beginning.

§ 9.Miscellaneous clauses

1.The seller reserves the right to improve or modify any of the products without prior notice, provided that such improvement or modification shall not affect the form and function of the product. 2.This agreement supersedes and invalidates all other commitments and warranties relating to the subject matter hereof which may have been made by the parties either orally or in writing prior to the date hereof, and which shall become null and void from the date of the agreement is signed.3.This agreement shall not be assigned or transferred by either party except with written consent of the other. 4.Each party shall be responsible for all ist legal, accountancy or other costs and expenses incurred in the performance of ist obligation hereunder.

§ 10.Choice of law: Place of jurisdiction

1.This agreement is subject to the law applicable in the country in which the seller has its registered office. Both parties consent to the exclusive jurisdiction of the court at the registered office of the seller. 2.The seller has the right to sue at the court of competent jurisdiction for the buyer or any other court which may have jurisdiction under national or international law.

QUALITY IN MOTION 45 YEARS 1972 2017 NIKO
EN 1527 QUALITY ASSURANCE Helm Hellas S.A.
STRONGEST COMPANIES IN GREECE ICAP certificate 2011
eqa quality for leaders ISO 9001:2008
ΕΣΥΔ QS CERTIFICATION CERT NO 193
GlobalGROUP ISO 14001

Global

LOCATIONS

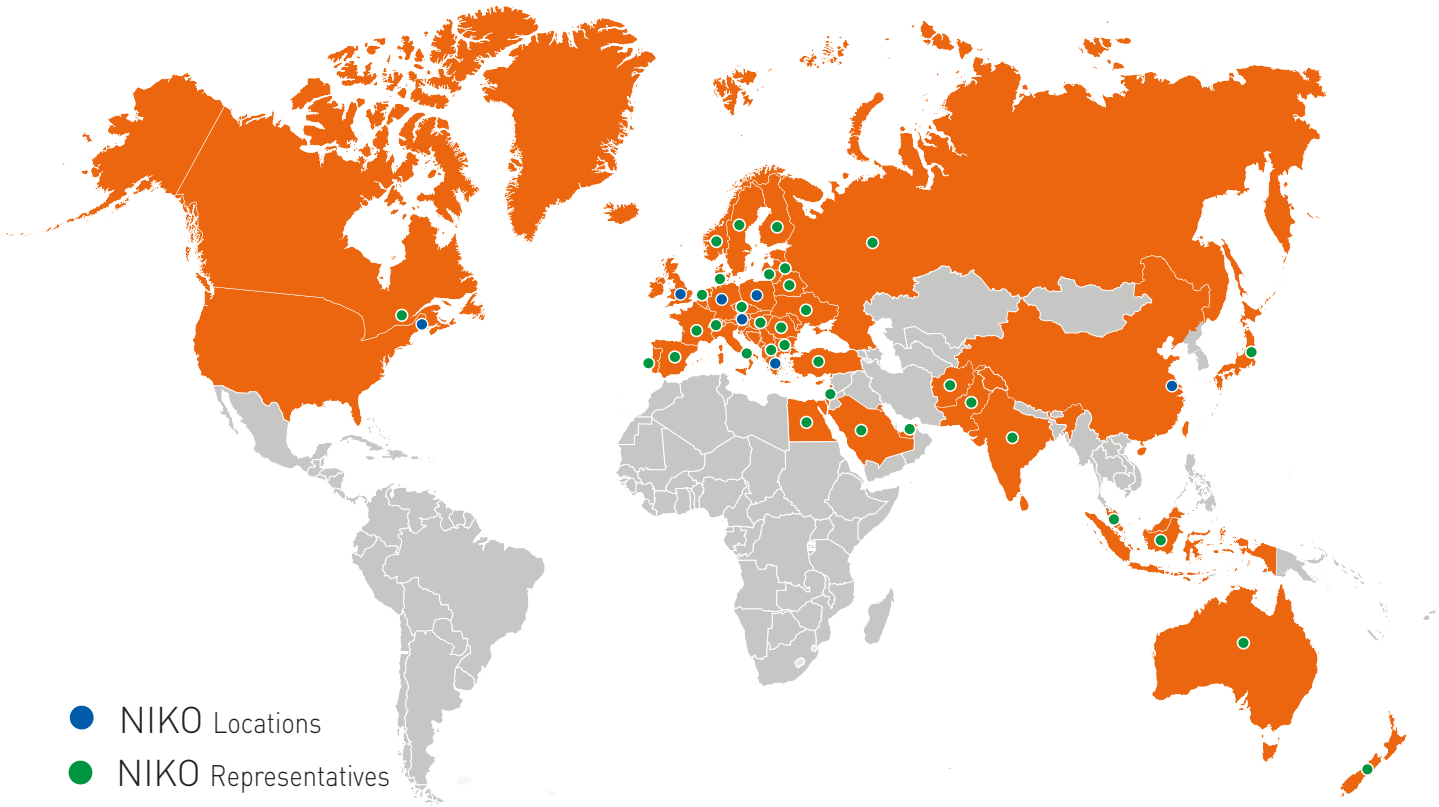

AUSTRIA-NIKO Vertriebs GmbH
Hainfelder Straße 48
A - 2560 Berndorf
Tel. 0043 2672 21201
Fax 0043 2672-21201-13
office.at@niko.eu.com
www.niko.world

CHINA-NIKO TRADING (SHANGHAI) Co., Ltd
Room 605, Building #13, No.354
Linghe Road, Pudong District,
P.R.China - 200120 Shanghai
Tel. 0086 139 1814 5645
info.cn@niko.eu.com

GERMANY-NIKO Technik GmbH
Robert-Bosch-Str. 14
DE – 42489 Wülfrath
Tel. 0049 (0) 2058 9093603
Fax 0049 (0) 2058 9093604
office.de@niko.eu.com

GREECE-Helm Hellas S.A.
82nd Km Athens-Korinthos
P.O. Box 209
GR - 201 00 KORINTHOS
Tel. 0030 27410 76800
Fax 0030 27410 25368
info@niko.eu.com

UNITED KINGDOM-NIKO Ltd
Units 15-21, Insight Park
Welsh Road East, Southam
Warwickshire, CV47 1NE - UK
Tel. 0044 (0) 1926 813111
Fax 0044 (0) 1926 815599
Sales@niko.co.uk
www.niko.co.uk

USA-NIKO Track
300 Highpoint Ave
USA - Portsmouth, RI. 02871
Tel. 001 (0) 401 683 7525
Fax 001 (0) 401 293 3848
info@nikotrack.com
www.nikotrack.com

POLAND- NIKO Polska
Wojska Polskiego 65A
PL - Wielun 98-300
Tel. 0048 504 00 35 56
info.pl@niko.eu.com

Copyright NIKO (Version June 2017)
We take no obligation for layout, composition, technical modifications as well as misprints.
Subject to technical modifications / Images can be differ from original.